SONY

4-081-737-**22**

FD Trinitron

WEGA

Trinitron® Color TV

Operating Instructions

KV-27FS13
KV-27FS17
KV-27FV17
KV-32FS13
KV-32FS17

© 2001 by Sony Corporation

WARNING

To reduce the risk of fire or electric shock, do not expose the TV to rain or moisture.

This symbol is intended to alert the user to the presence of uninsulated "dangerous voltage" within the product's enclosure that may be of sufficient magnitude to constitute a risk of electric shock to persons.

This symbol is intended to alert the user to the presence of important operating and maintenance (servicing) instructions in the literature accompanying the appliance.

Note to the CATV Installer

This reminder is provided to call the CATV system installer's attention to Article 820-40 of the NEC that provides guidelines for proper grounding and, in particular, specifies that the cable ground shall be connected to the grounding system of the building as close to the point of cable entry as practical.

SAFETY PRECAUTIONS

- ❑ Operate the TV only on 120 V AC.
- ❑ One blade of the power plug is wider than the other for safety purposes and will fit into the power outlet only one way. If you are unable to insert the plug fully into the outlet, contact your dealer.
- ❑ If any liquid or solid object falls into the TV, unplug it and have it checked by qualified personnel before operating it further.

CAUTION

When using TV games, computers, and similar products with your TV, keep the brightness and contrast functions at low settings. If a fixed (non-moving) pattern is left on the screen for long periods of time at a high brightness or contrast setting, the image can be permanently imprinted onto the screen. Continuously watching the same channel can cause the imprint of station logos onto the TV screen. These types of imprints are not covered by your warranty because they are the results of misuse.

To reduce the risk of electric shock, do not use this polarized plug with an extension cord, receptacle, or other outlet unless the blades can be fully inserted to prevent blade exposure.

✍ You are cautioned that any changes or modifications not expressly approved in this manual could void your authority to operate this equipment.

NOTIFICATION

This equipment has been tested and found to comply with the limits for a Class B digital device pursuant to Part 15 of the FCC Rules. These limits are designed to provide reasonable protection against harmful interference in a residential installation. This equipment generates, uses, and can radiate radio frequency energy and, if not installed and used in accordance with the instructions, may cause harmful interference with radio communications. However, there is no guarantee that interference will not occur in a particular installation. If this equipment does cause harmful interference to radio or television reception, which can be determined by turning the equipment off and on, the user is encouraged to try to correct the interference by one or more of the following measures:

- ❏ Reorient or relocate the receiving antennas.
- ❏ Increase the separation between the equipment and receiver.
- ❏ Connect the equipment into an outlet on a circuit different from that to which the receiver is connected.
- ❏ Consult the dealer or an experienced radio/TV technician for help.

Protecting the TV

- ❏ To prevent internal heat build-up, do not block the ventilation openings.
- ❏ Do not install the TV in a hot or humid place, or in a place subject to excessive dust or mechanical vibration.

Note on Caption Vision

This television receiver provides display of television closed captioning in accordance with § 15.119 of the FCC rules.
Use of this television for other than private viewing of programs broadcast on UHF or VHF or transmitted by cable companies for the use of the general public may require authorization from the broadcaster-cable company and/or program owner.

Owner's Record

The model and serial numbers are located on the front cover of this manual and the rear of your TV.

Trademarks and Copyrights

ENERGY STAR® is a registered mark.

As an ENERGY STAR® Partner, Sony has determined that this product or product models meet the ENERGY STAR® guidelines for energy efficiency.

Licensed by BBE Sound, Inc. under USP 4638258.4482866. BBE and BBE symbol are trademarks of BBE Sound, Inc.

KV-27FV17 only

(●)® SRS (SOUND RETRIEVAL SYSTEM)

The (●) SRS (SOUND RETRIEVAL SYSTEM) is manufactured by Sony Corporation under license from SRS Labs, Inc. It is covered by U.S. Patent No. 4,748,669. Other U.S. and foreing patents pending.

The word 'SRS' and the SRS symbol (●) are registered trademark of SRS Labs, Inc.

Important Safeguards

For your protection, please read these instructions completely, and keep this manual for future reference. Carefully observe and comply with all warnings, cautions and instructions placed on the set, or described in the operating instructions or service manual.

WARNING

To guard against injury, the following basic safety precautions should be observed in the installation, use, and servicing of the set.

Use

Power Sources

This set should be operated only from the type of power source indicated on the serial/model plate. If you are not sure of the type of electrical power supplied to your home, consult your dealer or local power company. For those sets designed to operate from battery power, refer to the operating instructions.

Grounding or Polarization

This set is equipped with a polarized AC power cord plug (a plug having one blade wider than the other), or with a three-wire grounding type plug (a plug having a third pin for grounding).
Follow the instructions below:

For the set with a polarized AC power cord plug

This plug will fit into the power outlet only one way. This is a safety feature. If you are unable to insert the plug fully into the outlet, try reversing the plug. If the plug should still fail to fit, contact your electrician to have a suitable outlet installed. Do not defeat the safety purpose of the polarized plug by forcing it in.

Alternate Warning
For the set with a three-wire grounding type AC plug

This plug will only fit into a grounding-type power outlet. This is a safety feature. If you are unable to insert the plug into the outlet, contact your electrician to have a suitable outlet installed. Do not defeat the safety purpose of the grounding plug.

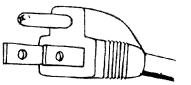

Overloading

Do not overload wall outlets, extension cords or convenience receptacles beyond their capacity, since this can result in fire or electric shock. Always turn the set off when it is not to be used. When the set is left unattended and unused for long periods of time, unplug it from the wall outlet as a precaution against the possibility of an internal malfunction that could create a fire hazard.

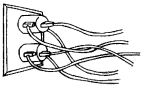

Do not disconnect the antenna or the power cord during a heavy storm. Lightning may strike while you are holding the cable or cord, causing serious injury. Turn off your TV and wait for the weather to improve.

Object and Liquid Entry

Never push objects of any kind into the set through the cabinet slots as they may touch dangerous voltage points or short out parts that could result in a fire or electric shock. Never spill liquid of any kind on the set.

Attachments

Do not use attachments not recommended by the manufacturer, as they may cause hazards.

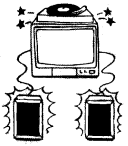

Do not place any objects, especially heavy objects, on top of the set. The object may fall from the set, causing injury.

Cleaning

Unplug the set from the wall outlet before cleaning or polishing it. Do not use liquid cleaners or aerosol cleaners. Use a cloth lightly dampened with water for cleaning the exterior of the set.

If a snapping or popping sound from a TV set is continuous or frequent while the TV is operating, unplug the TV and consult your dealer or service technician. It is normal for some TV sets to make occasional snapping or popping sounds, particularly when being turned on or off.

Installation

Always use two or more people to lift or move the set. The set is heavy and the bottom surface is flat. Serious injury can result from trying to move the set by yourself alone, or from unsteady handling. Install the set on a stable, level surface.

Water and Moisture

Do not use power-line operated sets near water — for example, near a bathtub, washbowl, kitchen sink, or laundry tub, in a wet basement, or near a swimming pool, etc.

Accessories

Do not place the set on an unstable cart, stand, tripod, bracket, table, or shelf. The set may fall, causing serious injury to a child or an adult, and serious damage to the set. Use only a cart or stand recommended by the manufacturer for the specific model of TV any mounting of the product should follow the manufacturer's instructions, and should use a mounting accessory recommended by the manufacturer. An appliance and cart combination should be moved with care. Quick stops, excessive force, and uneven surfaces may cause the appliance and cart combination to overturn.

Disconnect all cables and cords from the set before attempting to move the set.

Do not allow children or pets to climb up onto, or push against, the set. The set may fall, causing serious injury.

Ventilation

The slots and openings in the cabinet and in the back or bottom are provided for necessary ventilation. To ensure reliable operation of the set, and to protect it from overheating, these slots and openings must never be blocked or covered.

- **Never cover the slots and openings with a cloth or other materials.**

- **Never block the slots and openings by placing the set on a bed, sofa, rug or other similar surface.**

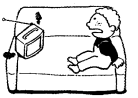

- **Never place the set in a confined space, such as a bookcase, or built-in cabinet, unless proper ventilation is provided.**

- **Do not place the set near or over a radiator or heat register, or where it is exposed to direct sunlight.**

Power-Cord Protection

Do not allow anything to rest on or roll over the power cord, and do not place the set where the power cord is subject to wear or abuse.

Grounding or Polarization

This set may be equipped with a polarized alternating current line plug (a plug having one blade wider than other). This plug will fit into the power outlet only one way. This is a safety feature. If you are unable to insert the plug fully into the outlet, try reversing the plug. If the plug should still fail to fit, contact you electrician to replace your obsolete outlet. Do not defeat the safety purpose of the polarized plug.

Antennas

Outdoor Antenna Grounding

If an outdoor antenna is installed, follow the precautions below. An outdoor antenna system should not be located in the vicinity of overhead power lines or other electric light or power circuits, or where it can come in contact with such power lines or circuits.

WHEN INSTALLING AN OUTDOOR ANTENNA SYSTEM, EXTREME CARE SHOULD BE TAKEN TO KEEP FROM CONTACTING SUCH POWER LINES OR CIRCUITS AS CONTACT WITH THEM IS ALMOST INVARIABLY FATAL.

Be sure the antenna system is grounded so as to provide some protection against voltage surges and built-up static charges. Section 810 of the National Electrical Code (NEC) in USA and Section 54 of the Canadian Electrical Code in Canada provides information with respect to proper grounding of the mast and supporting structure, grounding of the lead-in wire to an antenna discharge unit, size of grounding conductors, location of antenna discharge unit, connection to grounding electrodes, and requirements for the grounding electrode.

Antenna Grounding According to the NEC

Refer to section 54-300 of Canadian Electrical Code for Antenna Grounding.

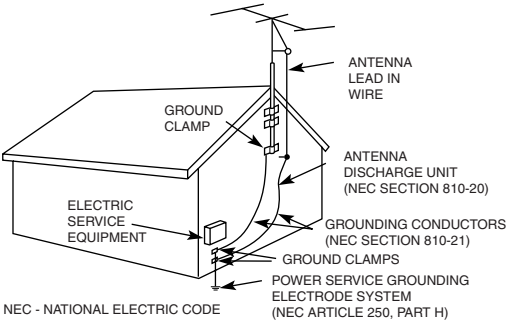

Lightning

For added protection for this television receiver during a lightning storm, or when it is left unattended and unused for long periods of time, unplug it from the wall outlet and disconnect the antenna. This will prevent damage to the receiver due to lightning and power-line surges.

Service

Damage Requiring Service

Unplug the set from the wall outlet and refer servicing to qualified service personnel under the following conditions:

- **When the power cord or plug is damaged or frayed.**

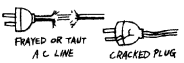

- **If liquid has been spilled into the set.**

- **If the set has been exposed to rain or water.**

- **If the set has been subject to excessive shock by being dropped, or the cabinet has been damaged.**

- **If the set does not operate normally when following the operating instructions. Adjust only those controls that are specified in the operating instructions. Improper adjustment of other controls may result in damage and will often require extensive work by a qualified technician to restore the set to normal operation.**

- **When the set exhibits a distinct change in performance — this indicates a need for service.**

Servicing

Do not attempt to service the set yourself since opening the cabinet may expose you to dangerous voltage or other hazards. Refer all servicing to qualified service personnel.

Replacement Parts

When replacement parts are required, be sure the service technician certifies in writing that he has used replacement parts specified by the manufacturer that have the same characteristics as the original parts. Unauthorized substitutions may result in fire, electric shock, or other hazards.

Safety Check

Upon completion of any service or repairs to the set, ask the service technician to perform routine safety checks (as specified by the manufacturer) to determine that the set is in safe operating condition, and to so certify. When the set reaches the end of its useful life, improper disposal could result in a picture tube implosion. Ask a qualified service technician to dispose of the set.

Contents

Introduction

Trinitron® Color TV Features 1
Batteries for the Remote Control..... 2
About this Manual 2

Connecting Your TV

Basic Connections..... 3
Cable Box Connections 4
Connecting Additional Equipment 6

Using the Remote Control and Basic Functions

Using the Remote Control..... 15
Setting Up the TV Automatically..... 17
Using Picture in Picture (PIP)..... 18
Quick Start to the Menus..... 20

Using the Menus

Using the Video Menu..... 23
Using the Audio Menu..... 24
Using the Channel Setup Menu 26
Parental Control..... 28
Using the Parental Control Menu 31
Using the Timer Menu 34
Using the Setup menu 35
Using the Basic Menu 36

Other Information

Programming the Remote Control 37
Troubleshooting 41
Specifications..... 44

Index..... 46

Introduction

Congratulations on your purchase of the Sony Trinitron® Color TV. Before you begin using this manual, please check the model number located on the rear of your TV or on the front cover of this manual.

Trinitron® Color TV Features

Some of the features you will enjoy include:

- ❏ **FLAT CRT** — New technologically advanced screen for optimal picture quality.
- ❏ **Parental Control** — A tool for parents to help monitor what their children watch on TV by establishing rating limits.
- ❏ **Favorite Channel** — Instant access to your favorite channels with the touch of a button.
- ❏ **Picture in Picture (PIP)** — Allows you to view two channels simultaneously (KV-27FV17, KV-27FS17, KV-32FS17 only).
- ❏ **Universal Remote Control** — Program your remote control to operate your connected cable box, VCR, digital satellite receiver, or DVD player.
- ❏ **Energy Star®** — A recognized symbol of energy efficiency.
- ❏ **S VIDEO** — A video input that offers enhanced picture quality.
- ❏ **Direct MTS** — Allows direct access to changing your Multi-Channel TV Sound: Stereo, Mono, or Auto-SAP (Second Audio Program), with the touch of a button.
- ❏ **Trilingual Menus** — Choose between English, French, or Spanish menus.
- ❏ **Front Panel Controls** — Allows for access to the on-screen menus without the use of a remote control.
- ❏ **Front A/V inputs** — A quick connection for video games, camcorders, or stereo/mono equipment.

Batteries for the Remote Control

Insert two AA (R6) batteries (supplied) into the remote control using the following illustration as a guide.

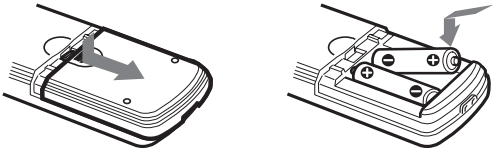

✍ Under normal conditions, batteries will last up to six months. If the remote control does not operate properly, the batteries might be worn out.

✍ If you will not be using the remote control for an extended period of time, remove the batteries to avoid possible damage from battery leakage.

✍ Your remote control can be programmed to operate most video equipment, (see page 37).

About this Manual

This manual provides instructions to help you enjoy your new TV. It shows you how to connect to an antenna or cable, cable box, VCR, DVD, satellite receiver, stereo system or camcorder. Once you are connected, follow the instructions and use the remote control to access the on-screen menus.

✍ The TV front and rear panels illustrated in this manual are for KV-27FS13, KV-27FS17, KV-32FS13, and KV-32FS17. The rear panel shown on page 13 is for KV-27FV17. Your front and rear panels may not look exactly like those illustrated.

Connecting Your TV

Read this chapter before setting up your TV for the first time. This section covers basic connections in addition to any optional equipment you may be connecting.

Basic Connections

TV with indoor or outdoor antenna, or CATV cable

Depending on the cable available in your home, choose one of the connections below:

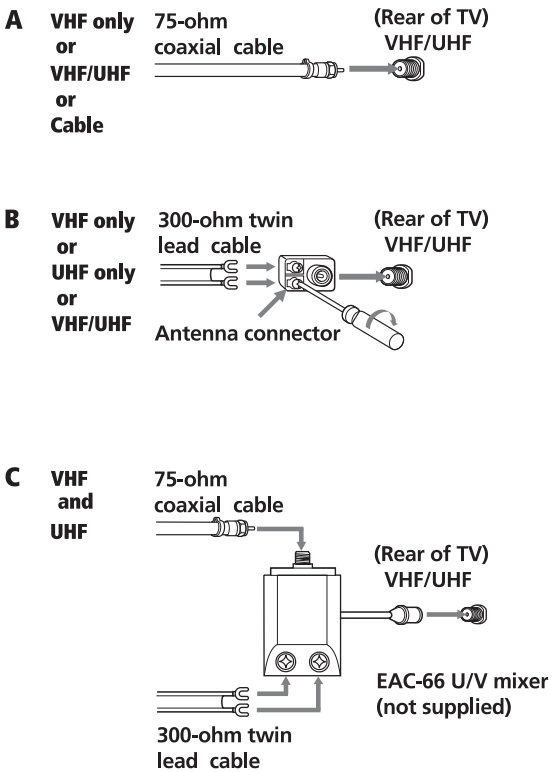

✍ If you are connecting to an indoor or outdoor antenna, you may need to adjust the orientation of the antenna for best reception.

Cable Box Connections

Some cable TV systems use scrambled or encoded signals that require a cable box to view all channels. If you subscribe to that kind of cable service, use this connection. Scrambled signals coming in to the TV through the cable box cannot be viewed in PIP. If some of your channels are scrambled, consider using the Cable Box and Cable connection (see page 5).

Cable Box and TV

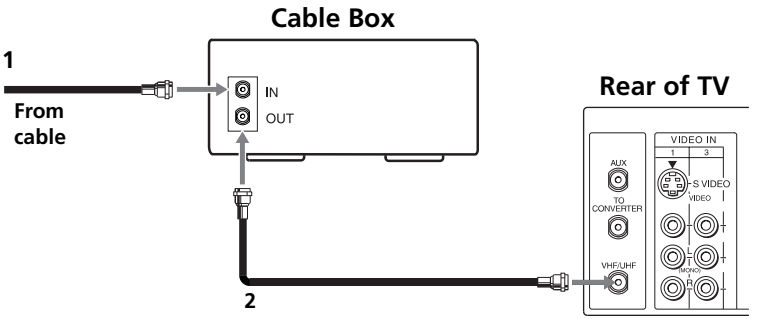

1 Connect the coaxial cable from your cable service to the IN jack on your cable box.

2 Connect a coaxial cable (not supplied) from the OUT jack on your cable box to the VHF/UHF jack on your TV.

✍ If you will be controlling all channel selection through your cable box, you should consider using the Channel Fix feature by setting your TV to channel 3 or 4, (see page 27).

Cable Box and Cable

Use this connection if you subscribe to a cable system that scrambles some channels (pay channels), but not all of them. This set up allows you to use the remote control to:

a) change channels through your cable box when you are receiving a scrambled signal, and
b) change channels through your TV.

This connection also allows you to use the PIP feature when you are viewing unscrambled channels coming directly into your TV from your cable. Scrambled signals coming through the cable box cannot be viewed in PIP. For more information on the PIP feature, see page 18.

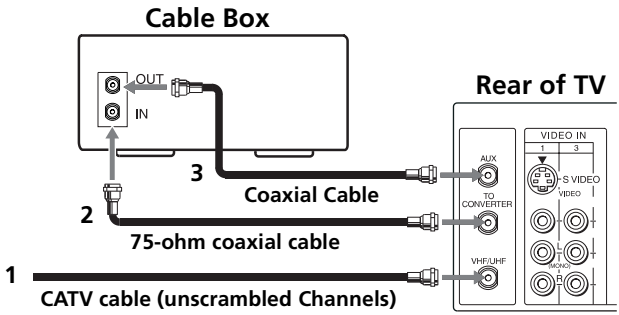

1 Connect the coaxial cable from your cable service to the VHF/UHF jack on your TV.

2 Using a coaxial cable (not supplied), connect the IN jack on your cable box to the TO CONVERTER jack on your TV.

3 Using a coaxial cable (not supplied), connect the OUT jack on your cable box to the AUX jack on your TV.

✍ Pressing the ANT button on the remote control switches between the cable box and direct cable inputs.

✍ Your Sony remote control can be programmed to operate your cable box, (see page 37).

✍ To use the cable box to change your channels, set your TV to channel 3 or 4. Setting the Channel Fix feature will assure you don't accidentally switch the channels using your TV, (see page 27).

Connecting Additional Equipment

TV and VCR

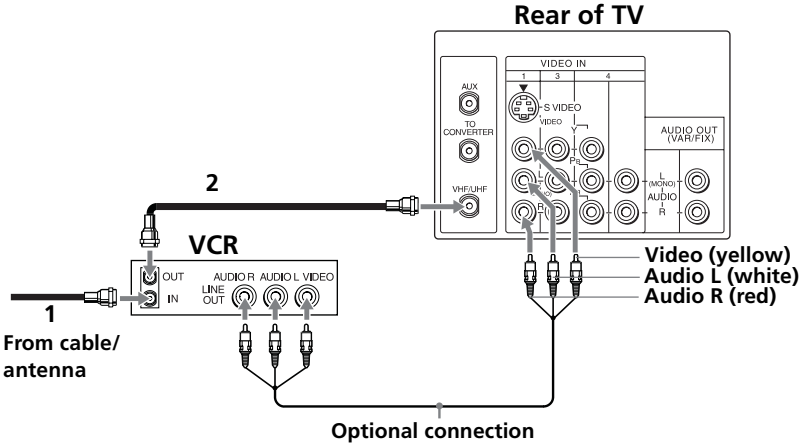

✍ To watch video programs from your VCR, tune your TV to channel 3 or 4 (as set on the rear of your VCR).

1 Connect the coaxial cable from your TV antenna or cable service to the IN jack on your VCR.

2 Using a coaxial cable (not supplied), connect the OUT jack on your VCR to the VHF/UHF jack on the TV.

Optional connection

If your VCR is equipped with video outputs, you can get better picture quality by connecting Audio/Video cables (not supplied) from AUDIO and VIDEO OUT on your VCR to AUDIO/VIDEO IN on your TV.

✍ For optimum picture quality, use S VIDEO instead of the yellow Audio/ Video cable. S VIDEO does not provide sound; the audio cables must still be connected.

✍ You can use the TV/VIDEO button to switch between the VHF/UHF and VIDEO inputs.

TV, VCR, and Cable Box

Use this connection if you subscribe to a cable system that scrambles some channels (pay channels), but not all of them. This set up allows you to use the remote control to:

a) change channels through your cable box or VCR when you are receiving a scrambled signal, and
b) change channels through your TV.

This connection also allows you to use the PIP feature when you are viewing unscrambled channels coming directly into your TV from your cable. Scrambled signals coming through the cable box cannot be viewed in PIP. For more information on the PIP feature, see page 18.

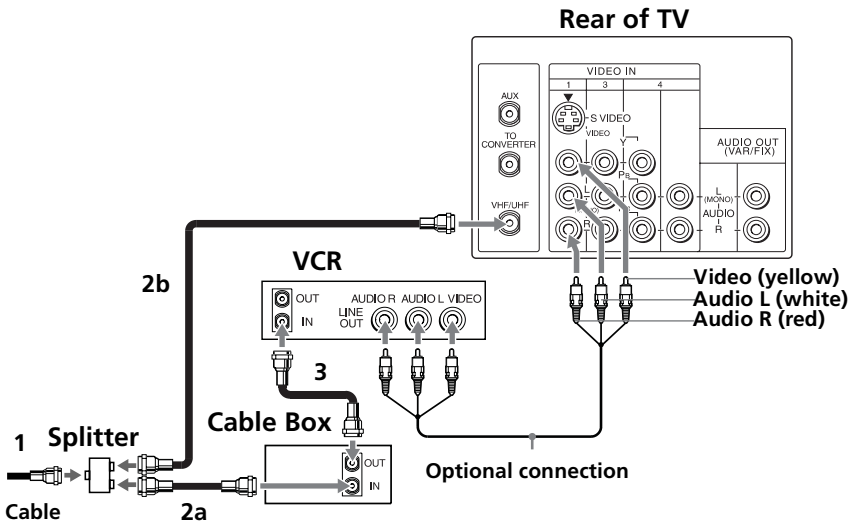

1 Connect the single input jack of the splitter to your incoming cable connection.

2 Using a coaxial cable (not supplied), connect the two output jacks of the splitter to:

a) the IN jack on your cable box, and

b) the VHF/UHF jack on the TV.

3 Using a coaxial cable (not supplied), connect the OUT jack on your cable box to the IN jack on your VCR.

(continued)

✍ If you will be controlling all channel selections through your cable box, you should consider using the Channel Fix feature by setting your TV to channel 3 or 4, (see page 27).

Optional connection

If your VCR is equipped with video outputs, you can get better picture quality by connecting Audio/Video cables (not supplied) from AUDIO and VIDEO OUT on your VCR to AUDIO/VIDEO IN on your TV.

✍ For optimum picture quality, use S VIDEO instead of the yellow Audio/ Video cable. S VIDEO does not provide sound; the audio cables must still be connected.

✍ You can use the TV/VIDEO button to switch between the VHF/UHF and VIDEO inputs.

TV and Satellite Receiver

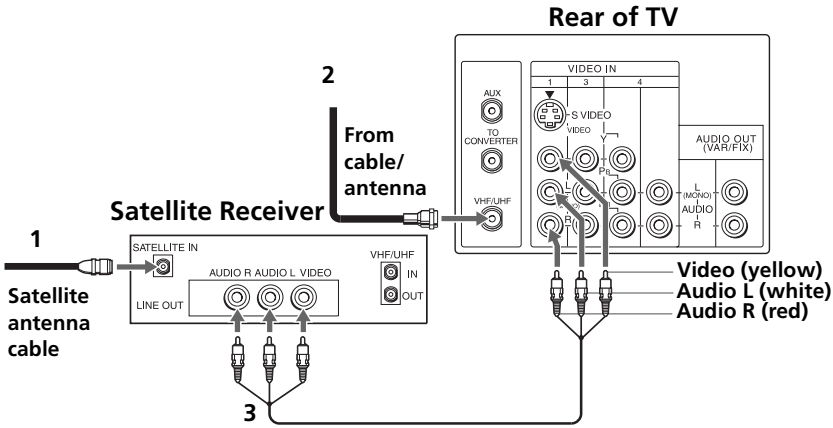

1 Connect the cable from your satellite antenna to SATELLITE IN on your satellite receiver.

2 Connect the coaxial cable from your cable or antenna to the VHF/UHF jack on your TV.

3 Using Audio/Video cables (not supplied), connect AUDIO and VIDEO OUT on your satellite receiver to AUDIO and VIDEO IN on your TV.

✍ For optimum picture quality, use S VIDEO instead of the yellow Audio/ Video cable. S VIDEO does not provide sound; the audio cables must still be connected.

✍ You can use the TV/VIDEO button to switch between the VHF/UHF and satellite receiver inputs.

TV, Satellite Receiver, and VCR

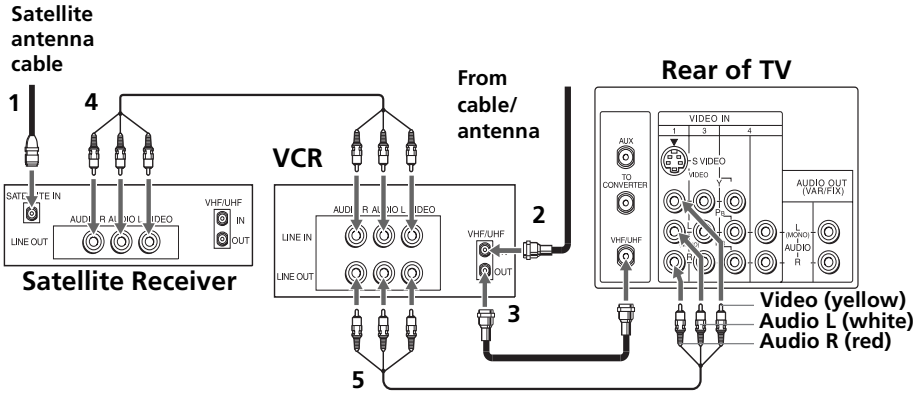

1 Connect the cable from your satellite antenna to SATELLITE IN on your satellite receiver.

2 Connect the coaxial cable from your cable or antenna to the IN jack on your VCR.

3 Using a coaxial cable (not supplied), connect the OUT jack on your VCR to the VHF/UHF jack on your TV.

4 Using Audio/Video cables (not supplied), connect AUDIO and VIDEO OUT on your satellite receiver to AUDIO and VIDEO IN on your VCR.

5 Using Audio/Video cables (not supplied), connect AUDIO and VIDEO OUT on your VCR to AUDIO and VIDEO IN on your TV.

✍ To view from the satellite receiver or VCR, select the video input to which your satellite receiver or VCR is connected by pressing TV/VIDEO on the remote control.

Connecting a Camcorder

Using Audio/Video cables (not supplied), connect AUDIO and VIDEO OUT on your camcorder to AUDIO and VIDEO IN on your TV.

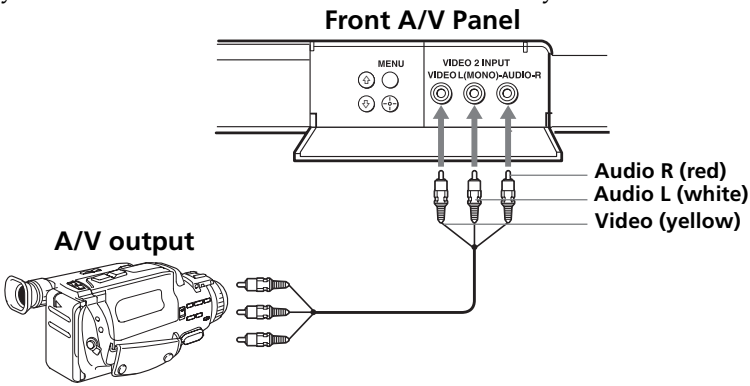

✍ If you have an S VIDEO equipped camcorder, you can use an S VIDEO cable for optimum picture quality (KV-27FV17 only).

Connecting a DVD Player

Using Audio/Video cables (not supplied), connect AUDIO and VIDEO OUT on your DVD player to AUDIO and VIDEO IN on your TV.

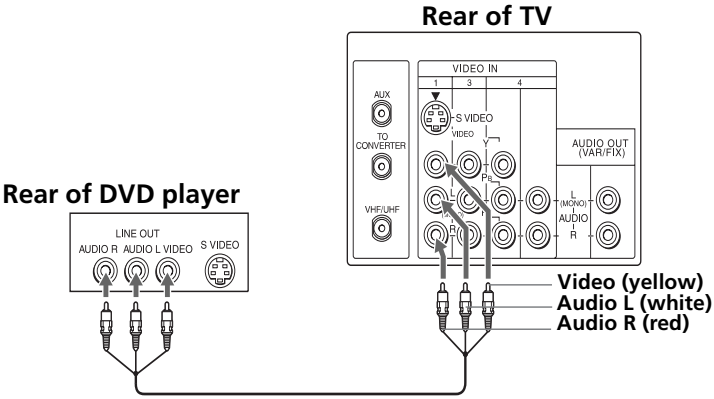

✍ For optimum picture quality, use S VIDEO instead of the yellow Audio/ Video cable. S VIDEO does not provide sound, the audio cables must still be connected.

Connecting an Audio System

Using Audio cables (not supplied), connect AUDIO OUT on your TV to one of the unused line inputs (e.g. TV, AUX, TAPE2) on your stereo.

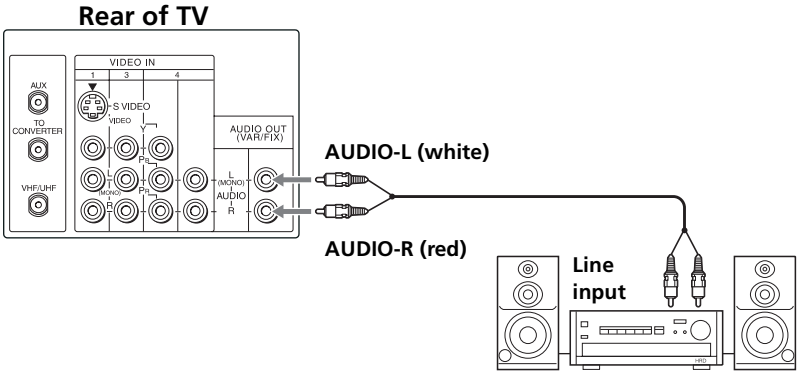

Set your stereo to the selected line input. See page 24 for additional audio setup instructions.

Connecting Two VCRs for Tape Editing

KV-27FV17 only

You can connect two VCRs togethers to edit video tapes. You can also connect both VCRs to your TV to view the program being recorded.

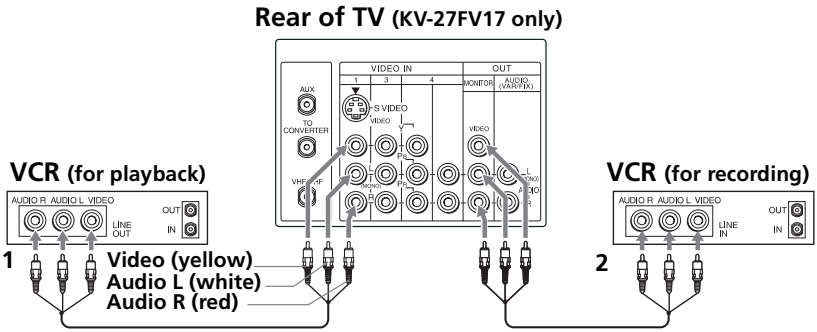

1 Using an Audio/Video cable (not supplied), connect AUDIO and VIDEO OUT on your first VCR to AUDIO and VIDEO IN on your TV.

2 Using Audio/Video cable (not supplied), connect AUDIO and VIDEO IN on the second VCR to the MONITOR AUDIO and VIDEO OUT on your TV.

✍ To perform tape editing, set the TV to the video input intended for playback by pressing TV/VIDEO.

Using the Remote Control and Basic Functions

This section shows you how to use the more advanced buttons on the remote control and how to use the on-screen menus.

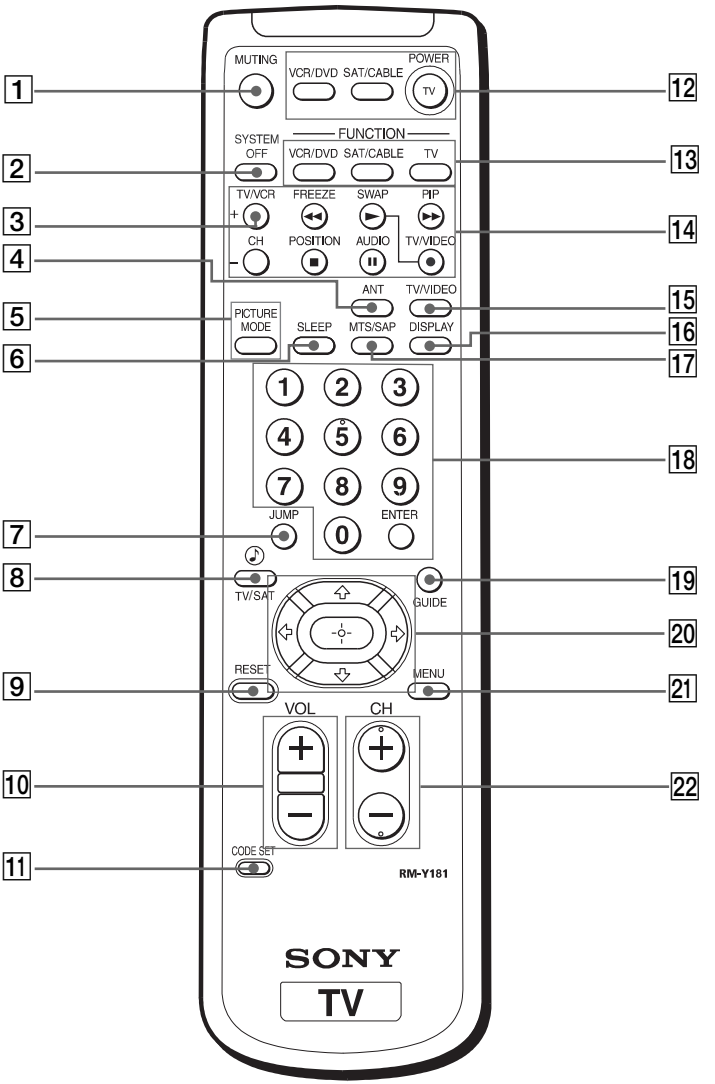

Using the Remote Control

Button	Description
1 **MUTING**	Instantly turns off the sound. Press again or press VOL + to restore sound.
2 **SYSTEM OFF**	Powers off all Sony equipment at once, (may not work with older equipment).
3 **TV/VCR**	Press when you are finished using a VCR and you want to switch to the TV input. Your VCR power will remain on.
4 **ANT (antenna)**	Press to change the VHF/UHF input to the AUX input (KV-27FS17, KV-27FV17, KV-32FS17 only).
5 **PICTURE MODE**	Cycles through the available Video Mode settings.
6 **SLEEP**	Turns the TV off automatically in approximately 15, 30, 45, 60, 90, or 120 minutes. Cancel by pressing until SLEEP OFF appears.
7 **JUMP**	Alternates between the last two channels selected with the 0-9 buttons.
8 TV/SAT	Cycles through available Steady Sound settings, (see page 24).
9 **RESET**	Press to return to factory settings while in an on-screen menu.
10 **VOL (volume)**	Press when you want to adjust the volume.
11 **CODE SET**	Use to program your remote control to operate connected video equipment, (see page 37).
12 **POWER**	Press when you want to turn connected equipment on and off.
13 **FUNCTION**	Press when you want to control connected equipment with your remote control.
14 **Picture in Picture (PIP)**	Operates PIP feature. To use the PIP feature, see page 18.
15 **TV/VIDEO**	Cycles through available video inputs.
16 **DISPLAY**	Press once to show current time, (if set) and channel number. Press again to turn DISPLAY off.

✍ The remote control shown on page 14 (RM-Y181) is for KV-27FS17, KV-27FV17, and KV-32FS17. Your remote control may not look like the one illustrated.

(continued)

17 **MTS/SAP**	Cycles through the Multi-channel TV Sound (MTS) options: Stereo, Mono, and Auto-SAP (Second Audio Programming).
18 **0-9 and ENTER**	Change channels directly, and enter numerical values in on-screen displays.
19 **GUIDE**	Brings up the custom guide of your satellite receiver.
20	Moves the cursor in the on-screen menus. Press the arrow buttons to move the cursor. Press the center button to select or access an option.
21 **MENU**	Displays the on-screen menu. Press again to exit the menu at any time.
22 **CH (channel)**	Press when you want to change channels.

✍ For information on Picture in Picture (PIP) operation buttons, see page 18.

✍ If you lose your remote control, see page 43.

Setting Up the TV Automatically

After you have finished connecting your TV, you can perform Auto Program to set up your channels.

1 Press POWER to turn on the TV. The Initial Setup screen appears.

```
Auto Setup

 Auto Program:  [CH+]
 Exit:          [CH-]

First please connect
cable/antenna
```

2 Press the TV FUNCTION button.

3 Press CH + on the remote control or in the TV front panel to perform Auto Program, or press CH − to exit.

✍ The Initial Setup screen appears each time you turn on the TV until you perform Auto Program.

To perform Auto Program again

1 Press MENU.

2 Press ⇨ to highlight Channel Setup menu (Ch).

3 Press ⇩ to highlight Cable. Press ⊕ to select.

4 Press ⇧ or ⇩ to select ON or OFF according to how you connected your TV. Press ⊕.

5 Press ⇩ to highlight Auto Program. Press ⊕ to search for channels.

✍ After performing Auto Program, press MENU to exit.

Using Picture in Picture (PIP)

The Picture-in-Picture (PIP) feature allows you to view two channels simultaneously, one in the full size “main” picture and one in a small “window” picture.

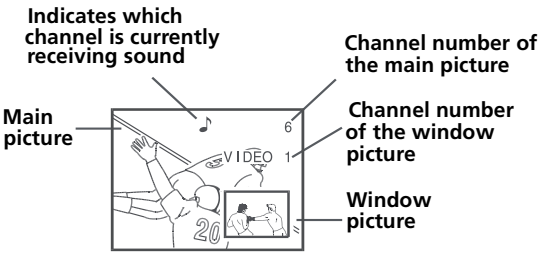

Dual Tuner PIP

KV-27FS17, KV-27FV17, KV-32FS17 only

These models are equipped with dual tuners. This means that PIP is “ready to use.”

PIP	Press to turn the PIP feature on and off. Press repeatedly to change the size of the window picture and to turn off the PIP feature.
TV/VIDEO	Press repeatedly to cycle through available video inputs on the video equipment you have connected to the TV.
AUDIO	Press to alternate sound between the main picture and the window picture. The sound symbol ♪ appears for 3 seconds, indicating whether you are hearing the sound from the main or picture window.
TV/VCR + CH −	Press to change the channel in the window picture. To change the channel in the main window, use the main CH+/- buttons at the bottom of the remote control.
POSITION	Press to move the location of the window picture among the four corners of the screen.
FREEZE	Press to freeze the window picture. Press again to restore the picture.
SWAP	Press to switch the main picture with the window picture. Press again to switch them back.

✍ The AUX input cannot be viewed in the window picture.

✍ For more information about your remote control, see page 15.

To use PIP

1. Press the TV FUNCTION button on your remote to view a working channel.
2. Press the PIP button and the window picture appears.
3. Use the yellow labeled buttons on your remote control to control the PIP features. See page 18 for descriptions on the PIP control buttons.

To check your PIP

1. Press the TV FUNCTION button on your remote to view a working channel.
2. Press the SWAP button and select that same channel again. You should now have the same program playing in both your main window and your picture window.
3. Use the yellow CH+/- to change the channel in the picture window.
4. Now use the main CH+/- on the bottom of your remote control to change the channel in the main window.
5. Press the TV/VIDEO button to switch to other video inputs for other equipment that is connected to any of the VIDEO IN jacks at the back of your TV. You should see a different picture in your PIP window for each connected video equipment component. Make sure the connected equipment is turned on and working when you perform this test.
6. If the PIP feature does not work properly with the TV or the connected video equipment component, refer to the Troubleshooting section on pages 42-43 for possible solutions.

✍ Any video equipment you have connected to the AUX input cannot be viewed in the PIP window.

✍ If you're viewing all channels through a cable box, the PIP feature will not work. The cable box only unscrambles one signal at a time, so the window picture will be the same as the main picture. However, you can watch a cable channel and another video source. Make sure your DVD, VCR, or satellite receiver is connected to the VIDEO IN jacks on the back of the TV, not the AUX input.

Quick Start to the Menus

The following settings are available in your on-screen menus:

Menu	Allows you to
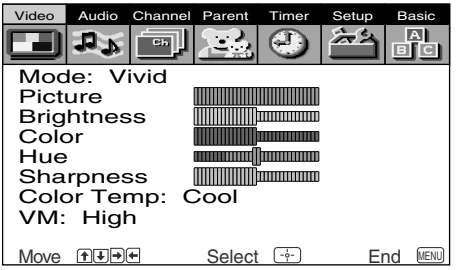	Make adjustments to your picture settings.
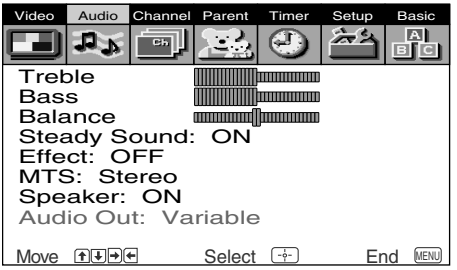	Change your audio settings.
	Customize your channel settings.

✍ The menus illustrated in this manuals are for KV-27FV17. Your menus may not look like those illustrated.

Menu	Allows you to
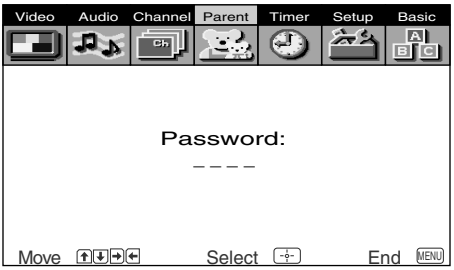	Set rating limits on your TV based on a program's rating or content.
	Set the clock on your TV and program scheduled viewing using Timer 1 and Timer 2.
	Program your channels, label video inputs, select menu languages, or run a demo of the menus.
	Set basic settings for your TV.

Using the Menus

This section shows the options available for setting up and adjusting your TV.

To access a menu

1. Press MENU to display the on-screen menu.
2. Use ⇦ or ⇨ to highlight the desired menu, then press ⊕.
3. Use the ⇧ or ⇩ buttons to highlight the desired option, then press ⊕.
4. Press ⊕ to complete the adjustment.
5. Press MENU to exit the menu.

Using the Video Menu

To access the Video menu, refer to the following steps:

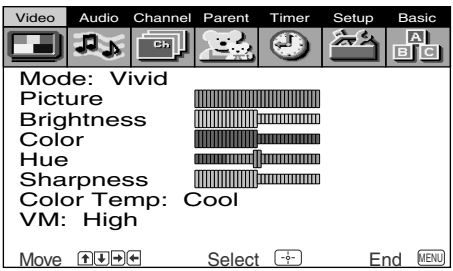

Mode *Customized picture viewing*	**Vivid:** Select for enhanced picture contrast and sharpness. **Standard:** Select for a standard picture. **Sports:** Select for a bright picture. **Movie:** Select for a finely detailed picture.

✍ Press PICTURE MODE for direct Mode settings (Vivid, Standard, Sports, Movie).

Picture *Picture contrast*	Press ⇦ to decrease picture contrast. Press ⇨ to increase picture contrast.
Brightness *Picture adjustment*	Press ⇦ to darken the picture. Press ⇨ to brighten the picture.
Color *Color saturation*	Press ⇦ to decrease color saturation. Press ⇨ to increase color saturation.
Hue *Color tones*	Press ⇦ to increase the red tones. Press ⇨ to increase the green tones.
Sharpness *Picture detail*	Press ⇦ to soften the picture. Press ⇨ to sharpen the picture.
Color Temp *White intensity adjustment*	**Cool:** Gives the white colors a blue tint. **Neutral:** Gives the white colors a neutral tint. **Warm:** Gives the white colors a red tint.
VM *Velocity Modulation*	Sharpens picture definition to give objects a sharp, clean edge. Select from one of the following options: **High**, **Low, OFF**.

Using the Audio Menu

To access the Audio menu, refer to the following steps:

Treble	Press ⇦ to decrease the higher pitched sound. Press ⇨ to increase the higher pitched sound.
Bass	Press ⇦ to decrease the lower pitched sound. Press ⇨ to increase the lower pitched sound.
Balance	Press ⇦ to emphasize the left speaker sound. Press ⇨ to emphasize the right speaker sound.
Steady Sound *Stabilizes volume*	KV-27FV17 only Press ⇧ or ⇩ to select one of the following options: **ON:** Select to stabilize the volume when changing channels. **OFF:** Select to turn Steady Sound off.

✍ Press TV/SAT for a direct selection of Steady Sound settings.

Effect	Press ⇧ or ⇩ to select one of the following options: **OFF:** Normal stereo or mono reception. **SRS:** Produces a dynamic three-dimensional sound for stereo audio signals (KV-27FV17 only). **Simulated:** Add a surround-like effect to mono programs (KV-27FV17 only). **Surround:** Simulates theater quality sound for stereo programs (KV-27FS13, KV-27FS17, KV-32FS13, KV-32FS17 only).

MTS *Multi-Channel sound*	**Stereo:** Select when viewing a broadcast in stereo. **Mono:** Select to reduce noise in areas of poor reception. **Auto-SAP:** Select to have the TV automatically switch to a Second Audio Program (SAP) when a signal is received.

✍ If your TV is set to Auto-SAP, some programs may be muted or distorted. If your TV does not output sound, change your Audio settings to Stereo or Mono.

✍ Press MTS/SAP for direct MTS settings (Stereo, Mono, Auto-SAP).

Speaker *Custom selection of audio output source*	**ON:** Select to listen to the sound from the TV speakers with or without a separate stereo system. **OFF:** Select to turn off the TV speakers and listen to the TV's sound only through external audio system speakers.
Audio Out *Use to control the TV's volume through a stereo*	Use Audio Out only when you have an external audio system connected to your TV. **Variable:** Adjust the volume through your TV. **Fixed:** Adjust the TV volume through a connected stereo.

✍ Audio Out can only be set when Speaker is set to OFF.

Using the Channel Setup Menu

To access the Channel Setup menu, refer to the following steps:

Favorite Channel
Quick access to favorite channels

With the Favorite Channel menu open:

1. Press ⊕ to select.
2. Use the ⇧ or ⇩ buttons to select Auto or Manual. When Auto is selected, the last seven channels accessed by the ⓪-⑨ buttons will appear.
3. When in Manual, press ⇦ then ⇩ to select the position (1-7) where you want to set a favorite channel. Then press ⊕.
4. Using the ⇧ or ⇩ buttons, select the desired channel.
5. Press ⊕ to change to the channel entered. Press MENU to exit.

✍ To use Favorite Channel: Exit all menus and press ⊕. Press ⇩ or ⇧ to move the cursor to the desired channel number and press ⊕.

✍ After you close the menu, the PIP window picture appears so you can preview the favorite channel (KV-27FS17, KV-27FV17, KV-32FS17 only).

Cable

ON: Select if you are receiving cable channels with a CATV cable.
OFF: Select if you are using a TV antenna.

✍ After changing your cable settings, you will need to perform Auto Program.

Channel Fix	**2-6:** Select when you want to control all channel selection through a cable box or VCR. Select the appropriate channel (usually 3 or 4) and use the cable box's or VCR's remote control for channel selection. **Video 1:** Select from available video inputs when you have connected video equipment (e.g. satellite receiver) and you want your TV fixed to it. **AUX 2-6:** Use this setting instead of the **2-6** if you want to change channels using a cable box, VCR or satellite receiver and you've connected it to the AUX input.
Auto Program	Perform Auto Program whenever setting up your TV. It will cycle through all available channels and program any receivable channels.
Channel Skip/Add	Use this feature after you run Auto Program to skip unwanted channels or add new ones. **1** Use the 0-9 buttons or the [CH+/-] buttons to select the channel. **2** Press ⊕ to Skip or Add (only one option will be available).
Channel Label *Label up to 40 channels with their call letters*	With the Channel Label window open: **1** Press ⊕, then press ⇧ or ⇩ until you reach the desired channel number. **2** Press ⊕ to activate the channel. **3** Press ⇩ then press ⊕ to highlight the label field. **4** Press ⇧ or ⇩ to display the first call letter or number of the caption and press ⊕ to select it. When finished, press ⊕ to activate.

✍ Favorite Channel, Channel Skip/Add, and Channel Label cannot be used when Channel Fix is set.

Parental Control

The Parental Control feature is designed to help parents monitor what their children watch on television. This section shows you the different rating systems available and how to set your TV's rating limit.

Overview of the Ratings

Once you have become familiar with these rating systems, you should be ready to set your TV's rating limit.

TV Ratings

The TV ratings are divided into two groups: age-based and content-based.

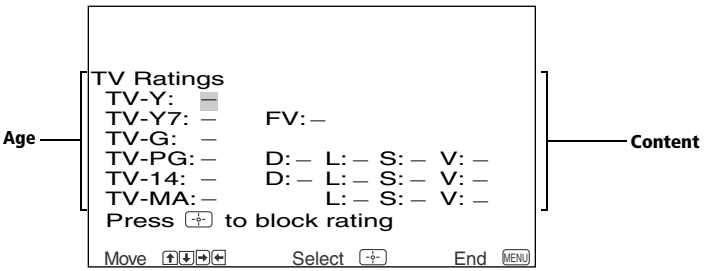

Age	Defined as
TV-Y	All children
TV-Y7	Directed to older children
TV-G	General audience
TV-PG	Parental Guidance suggested
TV-14	Parents Strongly cautioned
TV-MA	Mature Audience only

Contents	Defined as
FV	Fantasy Violence
D	Suggestive dialogue
L	Strong language
S	Sexual situations
V	Violence

✍ The content ratings will increase depending on the level of the age-based rating. For example, a program with a TV-PG V (Violence) rating may contain moderate violence, while a TV-14 V (Violence) rating may contain intense violence.

Movie Ratings

(U.S. models only)

This system defines the rating levels of movies shown in theaters and on prime cable channels.

Rating	Defined as
G	General audience
PG	Parental Guidance suggested
PG-13	Parents strongly cautioned
R	Restricted
NC-17	No one 17 and under admitted
X	Adult audience only

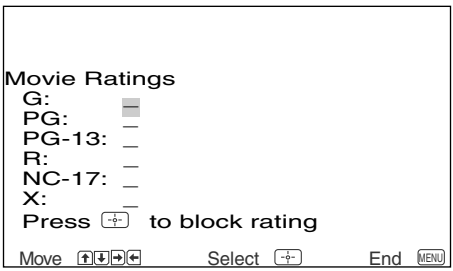

Unrated

(U.S. models only)

You have the option of blocking TV programs or movies that are not rated.

Allow	Allows all unrated programs
Block	Blocks all unrated programming

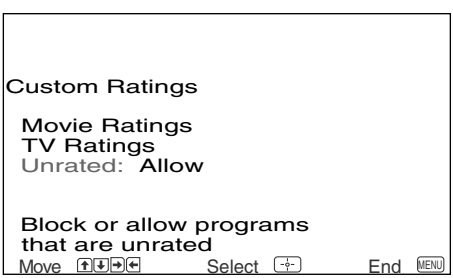

✍ If you choose to block unrated TV programs, please be aware that the following programs may be blocked: emergency broadcasts, political programs, sports, news, public service announcements, religious programs, and weather.

English Ratings

(Canadian models only)

These ratings are for Canadian programs that are broadcast in English.

Rating	Defined as
C	Children
C8+	Children 8 years and older
G	General programming
PG	Parental Guidance
14+	Viewers 14 and older
18+	Adult programming

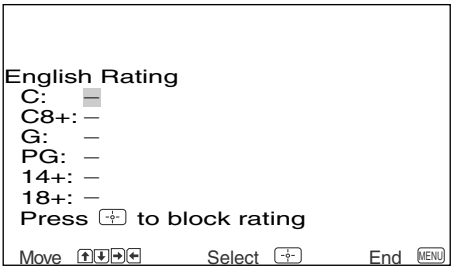

French Ratings

(Canadian models only)

These ratings are for Canadian programs that are broadcast in French.

Rating	Defined as
G	General
8 ans+	Not recommended for younger children
13 ans+	Not recommended for children under age 13
16 ans+	Not recommended for ages under 16
18 ans+	This program is restricted to adults

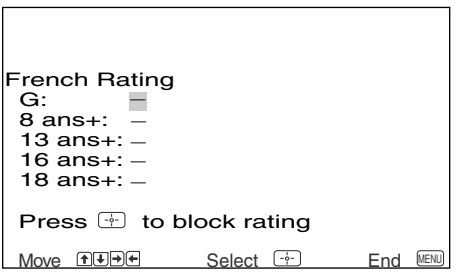

U.S.A. Ratings

(Canadian models only)

For programs from the United States, see “TV Ratings” on page 28.

Using the Parental Control Menu

To access the Parental Control menu, refer to the following steps:

In the Parental Control menu, you will be asked to set a 4-digit password for any further access into Parental Control.

1 Press ⊕, then use the ⓪-⑨ buttons to enter a 4-digit password.

✍ Keep this instruction manual in a safe place. If you forget your password, see page 42.

2 Confirm your password by entering it again.

Once your password is set correctly, the next Parental Control menu appears.

Setting the rating

You can change the Rating by selecting one of the Parental Lock options.

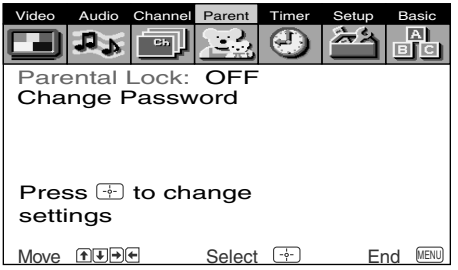

1 Move the cursor to Parental Lock and press ⊕.

If you are not familiar with the Parental Guidelines rating system, use one of the following preselected categories to simplify the rating selections: Child, Youth, or Young Adult.

2 Use the ⇧ or ⇩ buttons to select the desired rating, and press ⊕.

Rating	TV will allow a maximum rating of:
Child	TV-Y, TV-G, G (U.S. models only), G (Canadian models only)
Youth	TV-PG, PG (U.S. models only), PG (Canadian models only)
Young Adult	TV-14, PG-13 (U.S. models only), 14+ (Canadian models only)
Custom	Select to set more restrictive ratings, (see next section)
OFF	No rating limit

Using the Custom menu

Before setting Custom ratings, see pages 28-30, “Overview of the Ratings,” for a description of the available rating systems.

Follow the instructions on the screen to make your custom settings. See page 29 for U.S. models and page 30 for Canadian models for more information.

✍ Once you have blocked a rating or content, all higher ratings or content will be automatically blocked.

Changing your password

1 Use the ⇧ or ⇩ buttons to move the cursor to Change Password and press ⊕.

2 Follow steps 1 and 2 of "Using the Parental Control Menu" on page 31.

Information for Parents

To view a program that exceeds the TV rating

❑ Press ENTER ○, then use the ⓪-⑨ buttons to enter your password.

✍ Entering your password to view a blocked program will temporarily turn Lock to OFF. To reactivate your Lock settings, turn the TV off then back on. The TV will return to the settings that you have selected.

Using the Timer Menu

To access the Timer menu, refer to the following steps:

Current Time	With the menu open: **1** Press ⇧ or ⇩ to select the current time, then press ⊕. (If you are in Daylight Saving time, be sure to set Daylight Saving to "ON"). **2** Press ⇧ or ⇩ to enter the current time, then press ⊕. **3** Press MENU to exit the menu.
Timer 1 and Timer 2 *Scheduled viewing*	With the menu open, set cursor on Timer 1 or Timer 2: **1** Press ⇧ or ⇩ to select Timer 1 or Timer 2, then press ⊕. **2** Press ⇧ or ⇩ to enter your time and channel of preference, then press ⊕. **3** Press MENU to exit the menu.

✍ You must set the Current Time before you can use Timer 1 and Timer 2.

✍ You can set the Timer to ON, OFF, or Set. Once the timer is set, you can turn it on or off without having to go through the settings.

Daylight Saving	**OFF:** Select in fall at the end of Daylight Saving. **ON:** Select in spring to compensate for Daylight Saving.

✍ When you perform Auto Program, all Timer 1 and Timer 2 settings will be cleared.

✍ Any loss of power will cause Current Time, Timer 1 and Timer 2 settings to be cleared.

Using the Setup Menu

To access the Setup menu, refer to the following steps:

Caption Vision *Closed-Captioning*	Allows you to select from three closed caption modes (for programs that are broadcast with closed caption). Press ⇧ or ⇩ to select one of the following options: **OFF:** Turns off Caption Vision. **CC1, 2, 3, 4:** Displays printed dialogue and sound effects of a program. **TXT1, 2, 3, 4:** Displays network/station information. **XDS** (Extended Data Services): Displays information about the network and current program, if available.
Video Label *Label connected equipment*	Allows you to label the audio/video equipment you have connected to the TV so you can identify them when in the Display mode. With the Video Label window open: **1** Press ⇧ or ⇩ to access the input you want to label and press ⊕. **2** Press ⇧ or ⇩ to choose a label and press ⊕.
Tilt Correction	Press ⇩ or ⇧ to correct any tilt of the picture by –5 and +5. Press ⊕ to activate.
Language	Select to display all menus in your language of choice. Use the ⇧ or ⇩ buttons, select the desired language and press ⊕.
16:9 Enhanced	Provides enhanced picture resolution for wide screen sources such as DVD, (only available when the TV is in Video mode).
Demo	Select to perform a demonstration of the on-screen menus.

Using the Basic Menu

To access the Basic menu, refer to the following steps:

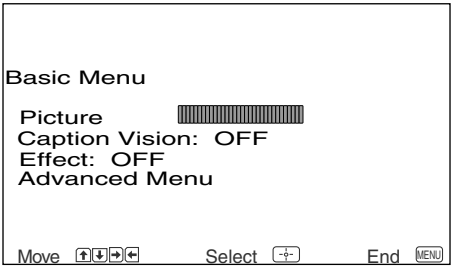

Picture *Picture contrast*	Press ⇦ to decrease picture contrast. Press ⇨ to increase picture contrast.
Caption Vision *Closed-Captioning*	Allows you to select from three closed caption modes (for programs that are broadcast with closed caption). Press ⇧ or ⇩ to select one of the following options: **OFF:** Caption Vision is not activated. **CC1, 2, 3, 4:** Displays printed dialogue and sound effects of a program. **TXT1, 2, 3, 4:** Displays network/station information. **XDS** (Extended Data Services): Displays information about the network and current program, if available.
Effect	Press ⇧ or ⇩ to select one of the following options: **OFF:** Normal stereo or mono reception. **SRS:** Produces a dynamic three-dimensional sound for stereo audio signals (KV-27FV17 only). **Simulated:** Add a surround-like effect to mono programs (KV-27FV17 only). **Surround:** Simulates theater quality sound for stereo programs (KV-27FS13, KV-27FS17, KV-32FS13, KV-32FS17 only).
Advanced Menu	Select to return to the main menus.

✍ If you use the MENU button to close the Basic menu, only the Basic menu appears when you press MENU again. To have access to the other menus, use ⇩ to select Advanced Menu.

Other Information

Programming the Remote Control

You can use the supplied remote control to operate Sony or non-Sony video equipment.

1. Press CODE SET.
2. Press VCR/DVD or SAT/CABLE (FUNCTION).
3. Use the 0-9 buttons to key in the code number from the following chart.
4. Press ENTER.

VCR codes

Sony	301, 302, 303
Admiral (M.Ward)	327
Aiwa	338, 344
Audio Dynamic	314, 337
Broksonic	319, 317
Canon	309, 308
Citizen	332
Craig	302, 332
Criterion	315
Curtis Mathis	304, 338, 309
Daewoo	341, 312, 309
DBX	314, 336, 337
Dimensia	304
Emerson	319, 320, 316, 317, 318, 341
Fisher	330, 335
Funai	338
General Electric	329, 304, 309
Go Video	322, 339, 340
Goldstar	332
Hitachi	306, 304, 305, 338
Instant Replay	309, 308
JCPenney	309, 305, 304, 330, 314, 336, 337
JVC	314, 336, 337, 345, 346, 347
Kenwood	314, 336, 332, 337
LXI (Sears)	332, 305, 330, 335, 338
Magnavox	308, 309, 310
Marantz	314, 336, 337
Marta	332
Memorex	309, 335
Minolta	305, 304
Mitsubishi/MGA	323, 324, 325, 326
Multitech	325, 338, 321
NEC	314, 336, 337
Olympic	309, 308
Optimus	327
Panasonic	308, 309, 306, 307
Pentax	305, 304
Philco	308, 309
Philips	308, 309, 310
Pioneer	308
Quasar	308, 309, 306
RCA/PROSCAN	304, 305, 308, 309, 311, 312, 313, 310, 329

VCR codes

Realistic	309, 330, 328, 335, 324, 338
Samsung	322, 313, 321
Sansui	314
Sanyo	330, 335
Scott	312, 313, 321, 335, 323, 324, 325, 326
Sharp	327, 328
Shintom	315
Signature 2000 (M.Ward)	338, 327
SV2000	338
Sylvania	308, 309, 338, 310
Symphonic	338
Tashiro	332
Tatung	314, 336, 337
Teac	314, 336, 338, 337
Technics	309, 308
Toshiba	312, 311
Wards	327, 328, 335, 331, 332
Yamaha	314, 330, 336, 337
Zenith	331

Cable box codes

Sony	230
Hamlin/Regal	222, 223, 224, 225, 226
Jerrold/G. I.	201, 202, 203, 204, 205, 206, 207, 208, 218
Oak	227, 228, 229
Panasonic	219, 220, 221
Pioneer	214, 215
Scientific Atlanta	209, 210, 211
Tocom	216, 217
Zenith	212, 213

Laser Disc Player codes

Sony	701
Panasonic	704, 710
Pioneer	702

DBS codes

DIRECTV	809
Echostar/Dish Network	810

Satellite receiver codes

Sony	801 (preset code for remote control
General Electric	802
Hitachi	805
Hughes	804
Panasonic	803
RCA/PROSCAN	802, 808
Toshiba	806, 807

DVD codes

Sony	751
JVC	756
Mitsubishi	761
Onkyo	762
Oritron	759
Panasonic	753
Philips/ Magnavox	757
Pioneer	752
RCA	755
Samsung/Hitachi	758
Toshiba	754
Zenith	760

✍ If more than one code number is listed, try entering them one by one until you come to the correct code for your equipment.

✍ Whenever you remove the batteries the code numbers may revert to the factory setting and must be reset.

✍ In some rare cases, you may not be able to operate your equipment with the supplied remote control. In this case, use the equipment's supplied remote control.

Operating a VCR

Press	To
VCR/DVD	Power on the VCR
0-9	Select channels directly
CH ⊕ CH ⊖	Change channels
►	Play video tape
■	Stop
◄◄ or ►►	Search forward or backward
❚❚	Pause
● and ► at the same time	Record
TV/VCR + ○	Change between VCR and TV inputs

Operating a DVD

Press	To
VCR/DVD	Power on the DVD
0-9	Select chapters directly
CH ⊕ CH ⊖	Search chapters forward or backward
►	Play DVD
■	Stop
❚❚	Pause
⇧, ⇩, ⇦, ⇨	Move the cursor in the menu
MENU	Display the DVD menu

Operating a Laser Disc

Press	To
VCR/DVD	Power on the laser disc
CH ⊕ CH ⊖	Search chapters forward or backward
►	Play disc
■	Stop
❚❚	Pause

Troubleshooting

If you are having a problem with your TV, try the suggestions below. If the problem persists, contact your nearest Sony dealer.

No picture, no sound	❑ Make sure the power cord is plugged in. ❑ If red light is flashing on the front of your TV for more than a few minutes, disconnect and reconnect the power cord to restore the TV. If the problem continues, call your local service center. ❑ Check the TV/VIDEO settings: when watching TV, set to TV; when watching video equipment, set to VIDEO (page 15). ❑ Make sure the batteries have been inserted correctly into the remote control (page 2). ❑ Try another channel, it could be station trouble.
Poor or no picture, good sound	❑ Adjust Picture in the Video menu (page 23). ❑ Adjust Brightness in the Video menu (page 23). ❑ Check the antenna and/or cable connections (page 3).
Good picture, no sound	❑ Press MUTING so that MUTING disappears from the screen (page 15). ❑ Check your Audio settings. Your TV may be set to Auto-SAP (page 25).
No color	❑ Adjust Color in the Video menu (page 23).
No signal	❑ Check the Cable setting in the Channel Setup menu (page 26). ❑ Check the antenna and/or cable connections (page 3). ❑ Make sure the channel selected is currently broadcasting.
Dotted lines or stripes	❑ Adjust the antenna. ❑ Move the TV away from other electronic equipment. Some electronic equipment can create electrical noise, which can interfere with TV reception.
Double images or ghosts	❑ Check your outdoor antenna or call your cable service provider.
Cannot receive higher number channels (UHF) when using an antenna	❑ Make sure Cable is set to OFF in the Channel Setup menu (page 26). ❑ Perform Auto Program to add channels that are not presently in the memory (page 17).

Cable stations don't seem to work	❑ Make sure Cable is set to ON in the Channel Setup menu (page 26). ❑ Perform Auto Program to add channels that are not presently in the memory (page 17).
Remote control does not operate	❑ Batteries could be weak. Replace them (page 2). ❑ Move the TV 3-4 feet away from fluorescent lights.
Cannot change channels with the remote control	❑ Make sure you have not inadvertently switched your TV from the channel 3 or 4 setting if you are using another device to change channels. ❑ If you are using another device to control channels, be sure the FUNCTION button for that device has been pressed. For example, if you're using your VCR to control channels, be sure to press the VCR/DVD FUNCTION buttons (page 15).
The TV needs to be cleaned	❑ Clean the TV with a soft dry cloth. Never use strong solvents such as thinner or benzine, which might damage the finish of the cabinet.
Lost password for Parental Control	❑ In the password screen, enter the following master password: 4357. After using the master password, you must create a new password; it cannot be used to unlock currently blocked channels.
Cannot access other menus when using the Basic Menu	❑ If you use the MENU button to close the Basic menu, only the Basic menu appears when you press MENU again. To have access to the other menus, use the ⇩ button to select Advanced Menu (page 36).
The remote control won't work in PIP mode	❑ Press the TV FUNCTION button. You may have inadvertently pressed the VCR/DVD FUNCTION button, which changes the PIP buttons to VCR mode (page 15).
There is no window picture or it is just static	❑ Be sure your window picture is set to a video source/channel that has a program airing. ❑ You may be tuned to a video input with nothing connected to it. Try cycling through your video inputs using the yellow PIP TV/VIDEO button with the red dot (page 18). ❑ PIP is not set to receive a signal from the AUX input. If you have connected a VCR, DVD or Satellite Receiver to the AUX input on the TV, it will not show in the small window picture.

I get the same program in the window picture as in the main picture	❑	Both may be set to the same channel. Try changing channels in either the main picture or the window picture (page 18).
	❑	Your TV may be set up to select all your channels through a cable box. The cable box will only unscramble one signal at a time, so you cannot use the PIP feature. If possible, run a direct cable to the VHF/UHF jack on your TV. This will only work if your cable system provides an unscrambled signal (page 5).
You lost your remote control	❑	You can use the front Audio/Video panel controls to access the menu. Press MENU to open the menu. Use the ⇧ or ⇩ buttons on the front Audio/Video panel instead of the ⇧ or ⇩ buttons on the remote control. Use the button on the front Audio/Video panel instead of the ⇦, ⇨, and buttons on the remote control. Press MENU again when the setting or adjustment is complete. Contact your nearest Sony dealer to order a replacement.

If, after reading these Operating Instructions, you have additional questions related to the use of your Sony television, please call our Direct Response Center at 1-800-222-SONY (7669) (U.S. residents only) or (416) 499-SONY (7669) (Canadian residents only).

Specifications

For all models (except as noted)

Television system	American TV standard/NTSC
Channel coverage	VHF: 2-13/UHF: 14-69/CATV: 1-125
Antenna	75-ohm external antenna terminal for VHF/UHF
Picture tube	FD Trinitron® tube
Power requirements	120V, 60 Hz
Supplied Accessories	Size AA (R6) batteries (2) Remote Control RM-Y180 (1) (KV-27FS13, KV-32FS13) RM-Y181 (1) (KV-27FS17, KV-27FV17, KV-32FS17)
Optional Accessories	Connecting cables VMC-810S/820S, VMC-720M, YC-YC-15V/30V, RK74A U/V mixer EAC-66 TV Stand: SU-27FD4 (27 inch models) SU-32FD4 (32 inch models)
KV-27FS13, KV-27FS17	
Screen size	Visible screen size: 27 inches (679 mm) measured diagonally Actual tube size: 29 inches (736.6 mm) measured diagonally
Inputs/outputs	3 video, 3 audio 1 S VIDEO 1 AUDIO OUT 1 RF input (KV-27FS13) 2 RF inputs (KV-27FS17)) 1 Y, P_B, P_R, 1 audio
Speaker output	7.5 W x 2
Power Consumption	170 W in use (KV-27FS13) 180 W in use (KV-27FS17) 1 W in standby
Dimensions (W/H/D)	700 x 632 x 512 mm (27 $^5/_8$ x 25 x 20 $^1/_4$ in.)
Mass	47 kg (103 lbs. 10 oz.)

KV-27FV17	
Screen size	Visible screen size: 27 inches (679 mm) measured diagonally Actual tube size: 29 inches (736.6 mm) measured diagonally
Inputs/outputs	3 video, 3 audio 2 S VIDEO 1 Audio Out 1 Monitor Out 2 RF inputs 1 Y, P_B, P_R, 1 audio
Speaker output	15 W x 2
Power Consumption	220 W in use 1 W in standby
Dimensions (W/H/D)	762 x 604 x 519 mm (30 x $23\,^7/_8$ x $20\,^1/_2$ in.)
Mass	49 kg (108 lbs.)
KV-32FS13, KV-32FS17	
Screen size	Visible screen size: 32 inches (803 mm) measured diagonally Actual tube size: 34 inches (863.6 mm) measured diagonally
Inputs/outputs	3 video, 3 audio 1 S VIDEO 1 Audio Out 1 RF input (KV-32FS13) 2 RF inputs (KV-32FS17) 1 Y, P_B, P_R, 1 audio
Speaker output	10 W x 2
Power Consumption	195 W in use (KV-32FS13) 205 W (KV-32FS17) 1 W in standby
Dimensions (W/H/D)	800 x 708 x 582 mm ($31\,^1/_2$ x $27\,^7/_8$ x 23 in.)
Mass	75 kg (163 lbs.)

Design and specifications are subject to change without notice.

Index

16:9 Enhanced 35

A

Advanced Menu 36
Audio Menu 24
Audio Out 25
Auto Program 17, 27
Auto-SAP 25

B

Balance 24
Basic Menu 36
Bass 24
Battery Installation 2
Brightness 23

C

Cable 26
Caption Vision 35, 36
Channel Label 27
Channel Fix 27
Channel Setup Menu 26
Channel Skip/Add 27
Color 23
Color Temp 23
Connections
- Cable and antenna 3
- Cable Box and Cable 5
- Cable Box and TV 4
- Connecting a Camcorder 11
- Connecting a DVD Player 11
- Connecting an Audio System 12
- Connecting Two VCRs for Tape Editing 13
- TV and VCR 6
- TV and Satellite Receiver 9
- TV, Satellite Receiver, and VCR 10
- TV, VCR, and Cable Box 7

Current Time 34

D

Daylight Saving 34
Demo 35
DISPLAY 15

E

Effect 24, 36
- OFF 24, 36
- Simulated 24, 36
- SRS 24, 36
- Surround 24, 36

F

Favorite Channel 26

H

Hue 23

L

Language 35

M

Menus
- Audio 24
- Basic 36
- Channel Setup 26
- Parental Control 31
- Setup 35
- Timer 34
- Video 23

Mode 23
- Movie 23
- Sports 23
- Standard 23
- Vivid 23

Mono 25
MTS 25
- Auto-SAP 25
- Mono 25
- Stereo 25

O

Overview of the Ratings 28

P

Parental Control 28
Parental Control Menu 31
Picture 23
Picture in Picture (PIP) 18
Programming the
  Remote Control 37

R

Remote Control 15
Ratings
    English Ratings 30
    French Ratings 30
    Movie Ratings 29
    TV Ratings 28
    Unrated 29
    U.S.A. Ratings 30

S

Setup Menu 35
Sharpness 23
SLEEP 15
Speaker 25
Specifications 44
Steady Sound 24
Stereo 25

T

Timer Menu 34
Timer 1 and Timer 2 34
Treble 24
Troubleshooting 41
TV Features 1
Tilt Correction 35

V

Video Menu 23
Video Label 35
VM 23

Sony Corporation Printed in USA